Brilliant
THE JEWEL IN LIGHTING

Storm
93651...
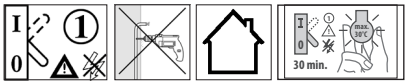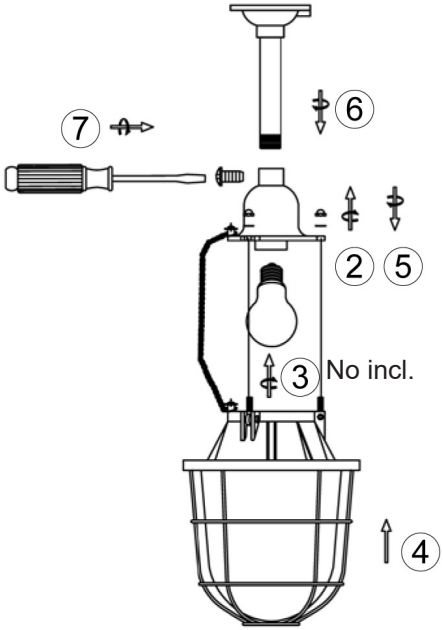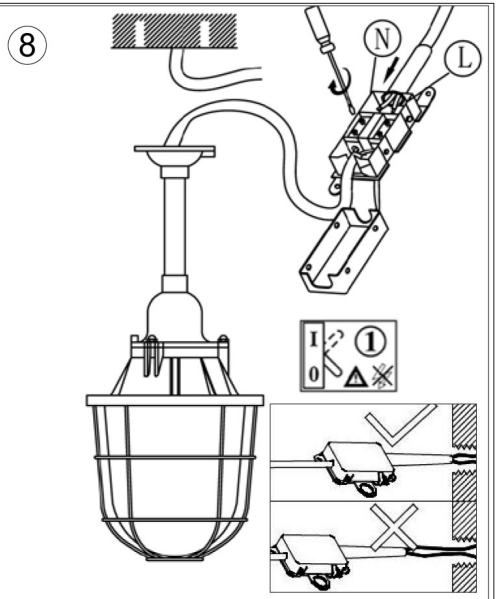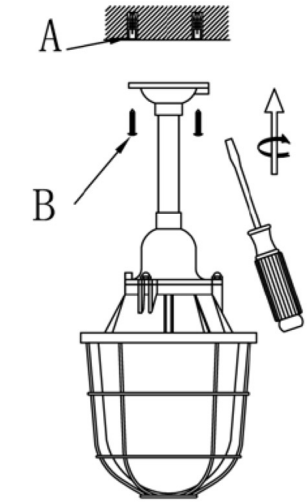
01.18